INSTRUCTION AND MAINTENANCE MANUAL

AUTOMATIC SERVICING EQUIPMENT FOR AIR CONDITIONING SYSTEMS

MODEL: ICEGARD ROSSO
A 132 (R-134a) and B 132 (R-1234yf)

1 CONTENTS

2 INTRODUCTION

Congratulations on your choice! The unit you have purchased is a direct result of our experience in this sector and it will guarantee you long-term, efficient operation.

This unit has been designed and built to ensure long lasting, high-level operating reliability with maximum safety for operators. ISC Systems has carefully selected all materials and components (combined with the adoption of generous safety margins) together with a management procedure based on continuous controls which, from the introduction of the product into the company, through storage and use in the workshop, will ensure the absence of damage, deterioration or malfunctions.

A further guarantee is provided by the strict factory tests and inspections to which the unit is subjected.

The user is therefore only responsible for ensuring proper use of the unit in accordance with the instructions found in this manual.

It is essential that this unit is used according to the intended use specified in this manual. ISC Systems cannot be held responsible for any damage to persons, animals and/or objects due to improper use, different to that illustrated in this instruction manual.

ISC Systems reserves the right to modify the technical characteristics and appearance of the product without prior notification.

This unit is designed for use in commercial environments and light industry.

The purpose of this manual is to supply the user with all the information needed to use the unit, from the time of purchase through to its disposal.

This manual may contain printing errors.

The manual has been devised to ensure maximum support for the personnel assigned for use and maintenance of the unit. However, for any special needs or requests for technical assistance or spare parts, please contact our Customer Service department.

Customer Assistance Service

ISC Systems.
Via Comunità Carnica, 9
33029 Villa Santina (UD)
Tel. +39-0433-748425
info@iscsystems.it

3 GUARANTEE

ISC Systems assures the highest quality both of the row materials and the technical procedures used in the production of its Equipment.

1. Check the integrity of the whole package upon receipt of the goods. Claims for transport damage must be notified to the Courier within 8 days from the date of receipt of the goods.
2. The ISC Systems product is under warranty if it has been used and kept as specified in the user manual provided with the Unit.
3. Interventions under warranty on ISC Systems products are performed by official ISC Systems Distributors or specialized personnel authorized by ISC Systems S.l.r.; transport charges are the Customer's responsibility.
4. For any direct contact with ISC Systems Distributors or with ISC Systems, it is always necessary to quote the Model and Serial Number of the Equipment as shown in the identification card.
5. The Product is guaranteed by ISC Systems against possible defects of the manufacturing materials for 12 months after the production date: components which are considered defective will be replaced free of charge. Further extensions of the warranty terms offered by the ISC Systems Distributor will be granted exclusively under his responsibility.
6. Replacement of components during the warranty period does not extend the validity of the warranty but only of the detective component, which will be covered for 3 months.
7. We suggest you preserve the original package.
8. Calibration of the pressure sensor and the load cells, replacement of quick connectors or external plastic panels, cleaning of solenoid valves and replacement of gaskets for HP/LP filling hoses must be considered as installation procedures or ordinary maintenance.

A warranty is not provided in the following cases:

- Components subjected to ordinary wear and tear of the equipment, such as, for example: power cable and sockets, external plastic panels, stickers, external HP/LP filling hoses, HP/LP quick connectors and all components usually subjected to ordinary wear and tear.
- Damage caused by negligence, improper maintenance, transport, storage, incorrect use.
- Operational faults caused by the use of the same Unit on A/C Equipment previously treated with "A/C Leak substances", fluids for flushing or which contain lubricants or refrigerants not suitable for the specific use or use of universal dye different from the type suggested by ISC Systems

4 DESCRIPTION OF THE UNIT

4.1 Intended use

ICEGARD ROSSO is an automatic unit designed solely for use in automobile air-conditioning system maintenance.
Recovery, recycling, vacuum, oil injection, UV additive injection, system filling and flushing are the functions that ***ICEGARD ROSSO*** is able of carrying out in complete safety and providing top-level performance in its category.

The unit is not designed to handle disposal operations! (see Section *Glossary of terms*)

4.2 Identification of the unit and its components

The **ICEGARD ROSSO** is composed of a series of components as shown in the following pictures.

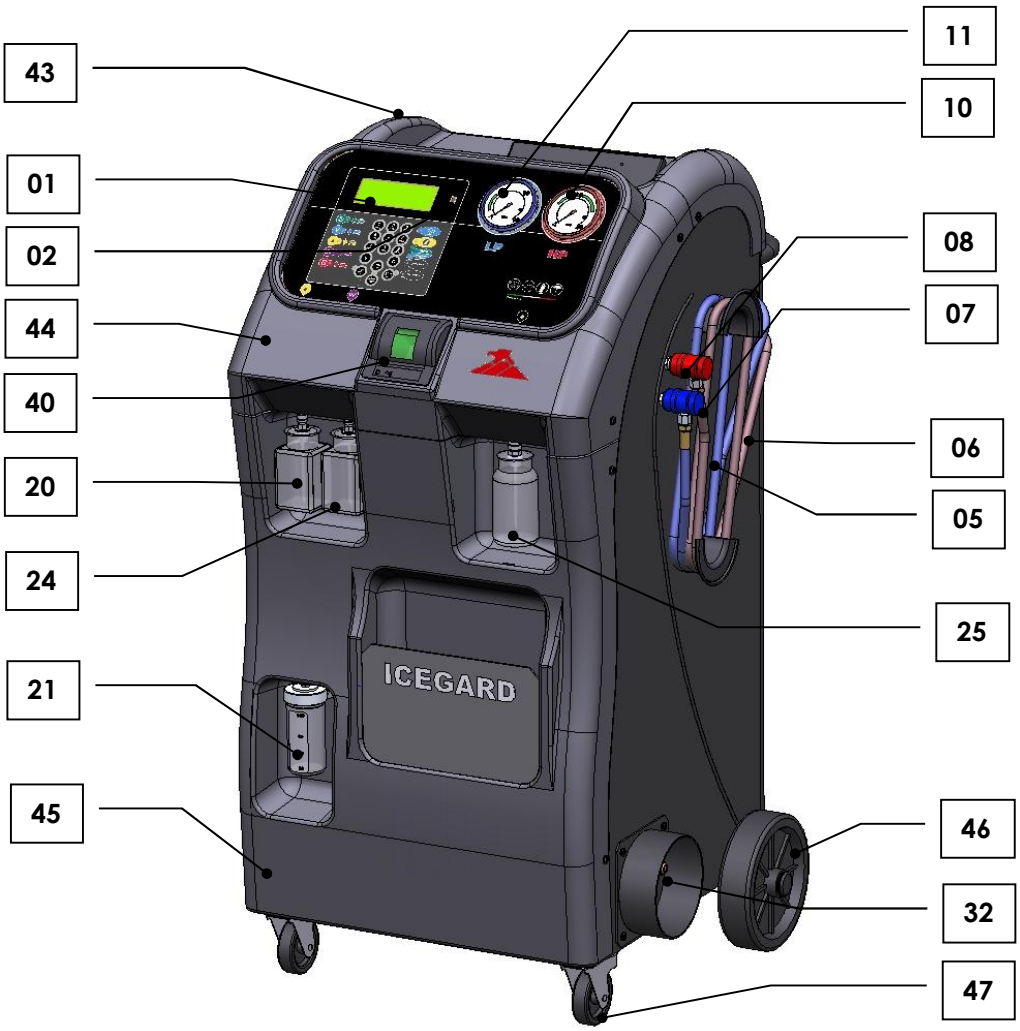

ITEM	DESCRIPTION	ITEM	DESCRIPTION
1	LOGIC BOARD	27	FAN CONDENSER
2	USB PORT	28	HP SAFETY PRESSURE SWITCH
4	15 kg LOAD CELL	29	MECHANICAL FILTER
5	FILLING HOSE LP 3000 mm	30	CHECK VALVE
6	FILLING HOSE HP 3000 mm	31	CHECK VALVE
7	LP QUICK CONNECTOR	32	NON-CONDENSABLE DISCHARGE VALVE
8	HP QUICK CONNECTOR	34	INTERNAL CONTAINER
9	15 kg LOAD CELL	35	VAPOUR SIDE GAS BOTTLE VALVE
10	HP D80 GAUGE	36	LIQUID SIDE GAS BOTTLE VALVE
11	LP D80 GAUGE	37	NON-CONDENSABLE GAS DISCHARGE VALVE
12	PRESSURE SENSOR –1/10 BAR	38	RUBBER HOSE
13	DISTILLER	39	RUBBER HOSE
14	OIL SEPARATOR	40	PRINTER
15	FILTER	41	PAPER ADVANCE BUTTON
16	COMPRESSOR	42	MAIN SWITCH
17	VACUUM PUMP	43	UPPER PANEL
18	60 kg LOAD CELL	44	CONTROL PANEL
19	15 kg LOAD CELL	45	LOWER PANEL
20	OIL PAG INJECTION CONTAINER	46	REAR WHEEL
21	OIL DRAIN CONTAINER	47	REVOLVING WHEEL WITH BRAKE
22	EXPANSION VALVE	49	PRESSURE SENSOR –1/10 BAR
23	CHECK VALVE	50	VALVE UNIT
24	UV ADDITIVE CONTAINER	53	SAFETY VALVE
25	OIL + UV POE INJECTION CONTAINER	54	GAS BOTTLE VALVE UNIT

Key	Main function
Enter	Confirm
Stop	Exit/Back
UP	Selection – screen change
DOWN	Selection – screen change
C	Delete
0-9	Alphanumeric keypad
LED ENTER	Operation pilot light
LED STOP	Operation pilot light
LED UP_DOWN	Operation pilot light
LED A	Recovery/recycling phase indicator
LED B	Vacuum phase indicator
LED C1	Oil injection phase indicator
LED C2	UV injection phase indicator
LED D	Filling phase indicator
PURGE	Non-condensable gas discharge manual opening
INFO	Real time reading of values measured by sensors.
ECO/SPEED	Recovery mode selection. • ECO allows recovery with the greatest accuracy • SPEED allows faster recovery
OPTION 1	Key function not assigned
OPTION 2	Key function not assigned
USB	• Allows transfer to the unit of the files for updating firmware, number of vehicles database, language of display messages. • Allows the following files to be imported to/exported from the unit: 1. Back up sensor calibrations, operational parameters, user models. 2. History of services performed 3. A4 printout of last service 4. Monthly report of refrigerant recovered or filled

4.3 Technical characteristics

4.3.1 Main characteristics

Refrigerant:	**R134a or R1234yf check on unit nameplate**
Electronic refrigerant scales:	**Precision +/- 1 g**
Electronic oil scales	**Precision +/- 1 g**
Electronic vacuum gauge LP branch:	**Kl. 1.0**
Electronic vacuum gauge cont. ref:	**Kl. 1.0**
LP HP gauges:	**Kl. 1.6**
Internal container capacity:	**12.5 L**
Maximum storable quantity:	**10 kg**
Vacuum pump flow rate:	**6 m³/h 3.5 CFM – 100 l/min**
Vacuum pump final vacuum:	**5 Pa – 0.05 mbar**
Compressor cubic capacity:	**14 cc**
Filtering station:	**2 filters combined**
Dimensions:	**1200x697x562 mm**
Weight:	**95 kg**

4.3.2 Power and consumption

Supply voltage:	**230 V 50/60 Hz**
Power:	**770 W**

4.3.3 Noise levels

The unit's noise levels have been measured from the operator's position (front).

Measurements recorded:	**53.5 dB (A)**
Distance of microphone from the ground:	**1.40 m**
Distance of microphone from the unit:	**1.00 m**

4.3.4 Technical data concerning the instruments used

(conforming to IEC 651 group 1 requirements).

B & K precision integrating noise meter.

Pre-polarised condenser microphone.

Acoustic level gauge.

5 SAFETY

The advanced technology adopted in the design and production of ***ICEGARD ROSSO*** makes this unit extremely simple and reliable for the performance of all operations.
The user is therefore not exposed to any risk provided that the general safety rules indicated below are followed and that the unit is properly used and maintained.

5.1 General safety rules

- This unit is intended for use by professionally trained operators only. Such operators must have knowledge of refrigeration, refrigeration systems, refrigerants and the potential hazards that units under high pressure can cause.
- To ensure safe and proper use of the unit, the user must read this manual carefully.
- Check that the type of refrigerant of the A/C system corresponds with the type of refrigerant planned for the unit.
- Only use refrigerant of the type planned for the unit, ref. unit nameplate fitted near main switch. Mixing with other types of refrigerant will seriously damage the cooling and refrigeration systems, as well as the service unit.
- Suitable protective equipment such as goggles and gloves MUST be worn. Contact with the refrigerant can cause blindness and other physical injuries to the operator. Avoid contact with the skin – the low boiling point of the refrigerant (approx. –30°C) can cause frost burns.
- Avoid inhalation of vapours from refrigerants.
- Ensure that all the valves are closed before making connections between the unit and an A/C system or an external tank.
- Ensure that the phase has been completed and that all valves are closed before disconnecting the unit. This will prevent release of the refrigerant into the atmosphere.
- Do not modify the safety valve or control system settings.
- Do not use external tanks or storage containers that have not been type-approved or that are not fitted with safety valves.
- Do not leave the unit connected to a power supply unless it is going to be used immediately. Switch off the electrical power supply if the unit is to be out of use for prolonged periods.
- All the flexible hoses may contain refrigerant at high pressure.
- Disconnect flexible hoses with extreme caution.
- The service unit and A/C systems in vehicles containing refrigerants should not be tested with compressed air. Some mixtures of air and refrigerant have proven to be combustible at high pressure levels. These mixtures are potentially hazardous and there is a risk of fire and explosion that can cause damage to property and personal injury. Additional medical and safety information can be obtained from the manufacturers of the lubricants and refrigerants used. Remember that the unit must be supervised at all times.
- The unit must **not** be used in potentially explosive environments.
- Do not smoke near the unit.

5.1.1 Special instructions for units to be used with R-1234yf

- Refrigerant R-1234yf is an inflammable gas.
- When using the unit, check that the fan close to the non-condensable gas discharge is operating.
- When using the unit, connect a dedicated discharge gas evacuation system to the non-condensable gas discharge flange.

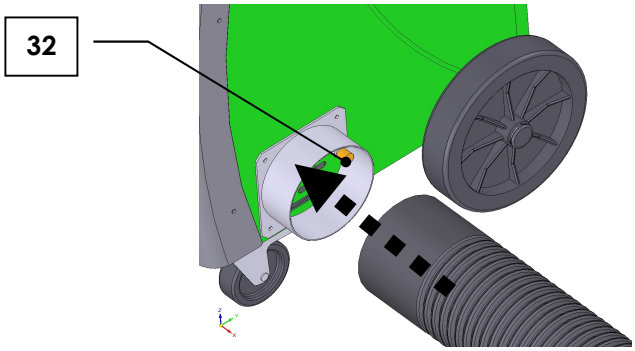

5.2 Guidelines for handling refrigerants

5.2.1 Glossary of terms

- **Refrigerant:** A refrigerant fluid solely of the type for which the unit has been designed (check the unit nameplate).
- **UV Additive:** Leak detection liquid for A/C systems.
- **A/C system:** Air conditioning system in the vehicle.
- **Unit:** ***ICEGARD ROSSO*** equipment for the recovery, recycling, vacuum and filling of the A/C system.
- **Operator**: Qualified person appointed for use of the unit.
- **External tank:** New, non-refillable refrigerant cylinder (e.g. R134a), used to fill the internal container.
- **Internal container:** Refrigerant storage tank.
- **Phase:** Execution of an individual function.
- **Cycle:** Execution of each individual phase in sequence.
- **Recovery:** The removal of refrigerant in any condition and its storage in a container outside the A/C system, without necessarily undergoing analysis or treatment of any kind.
- **Recycling:** A reduction in the contaminating substances used in refrigerants through oil separation, the removal of non-condensables and their single or multiple passage through elements that enable a reduction in humidity, acidity and particles.
- **Disposal:** Removal of refrigerant to storage, for subsequent destruction or transfer to disposal centres.
- **Vacuum:** Phase in which non-condensables and moisture are evacuated from an A/C system solely by means of a vacuum pump.
- **Oil injection:** Introduction of oil into an A/C system for the purpose of maintaining the correct amount specified by the manufacturer.
- **UV additive injection:** Introduction of UV additive into an A/C system to detect any leaks in the A/C system.
- **Filling:** Phase in which refrigerant is introduced into an A/C system in the amount specified by the manufacturer.
- **Flushing:** Phase for cleaning A/C system of any contaminant or foreign bodies by recirculation of the refrigerant.
- **Non-condensable gases:** Air accumulated during the refrigerant vaporizing phase, extracted from A/C systems or tanks.

5.2.2 Precautions for refrigerant storage

Refrigerant to be removed from a system must be handled carefully in order to prevent or minimise the possibility of mixing different refrigerants.
The unit is specifically designed for the treatment of a single type of refrigerant (check unit nameplate)
The cylinders used for storing refrigerants must be assigned to specific refrigerants to avoid mixing refrigerants of different types.
The cylinders used must be free of oil and other contaminants and must be clearly marked in order to identify the refrigerants they contain.

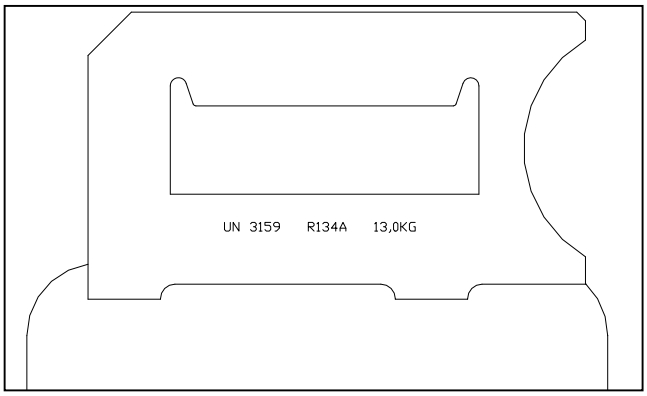

5.2.3 Condition of the refrigerant and the system

The history and age of a system can be important factors in deciding whether or not to recycle its refrigerant.
Installation and maintenance procedures carried out during the system's service life have a significant effect on the quality of the refrigerant.
Systems that have not been cleaned or properly evacuated may have high levels of contamination in the refrigerant and the oil. If the system's history is unknown, the refrigerant removed must at least be recycled before being re-introduced into the system.
When operators are unsure of the level of the refrigerant's contamination, preliminary checks can be performed using special kits for measuring acidity and humidity.

5.2.4 Recycling capacity

The recycling unit's filter systems must be replaced regularly (ref. section "MESSAGES") in order to maintain the efficiency of the recycling unit.
However, even if all factors indicate that recycling of the refrigerant is not necessary, recycling should nevertheless be carried out.

5.2.5 General considerations

Before re-introducing refrigerant into the system, the system itself must be evacuated and cleaned. In order to be sure that the system is free of contaminating agents, all the procedures described in this manual must be followed before introducing the refrigerant.
Clean and maintain the units regularly, especially when highly contaminated refrigerant has been used: it is extremely important that contamination from the previous servicing operation is not transferred to subsequent operations.

5.3 Safety devices

ICEGARD ROSSO is equipped with the following safety devices:

- Safety pressure switch: Stops the compressor in the event of excessive pressure.
- Overpressure valves.

No tampering with the above-mentioned safety devices is permitted.

5.4 Working environment

- The work environment for the unit must comply with the national regulations.
- The unit must be used in an open or well-ventilated environment (at least 4 changes of air per hour).
- The unit has been designed for use at a maximum altitude of 1000 m above sea level, within a temperature range of +5°C to +40°C and with maximum humidity of 50% at +50°C.
- Work in a well-lit environment (the average illumination value for work in mechanical and assembly workshops (for precision work) is 500 – 750 - 1000 lux).
- Work well clear of sparks or naked flames and hot surfaces. At high temperatures, the refrigerant breaks down, releasing toxic and chemical substances that are harmful to operators and the environment.
- Avoid inhaling the refrigerants and oils in the systems. Exposure may cause irritation to eyes and the respiratory tract.

6 PUTTING INTO SERVICE

6.1 Unpacking and checking the components

Remove the unit's packaging.
Check that all of the accessory components are present:

- First start up schedule
- Instruction manual
- 2 cylinder connectors
- By-pass HP-LP
- Power cable
- Safety kit (gloves, cap, goggles)
- 6 mm Allen key

6.2 Unit handling and storage

Remove the unit from the base pallet of the packaging.
The unit is moved on all four wheels. The two front wheels have brakes.

Although the heaviest components have been assembled on the base in order to lower the centre of gravity, it has not been possible to totally eliminate the ***risk of overturning.***

For transport of the unit or its handling over long distances or on rough surfaces, place the inner container in the safety position for transport purposes.
Replace the inner container in the working position before operating the unit.

- **Safety position for transport purposes.** Tighten the support screws to the end of the stroke. Do not force it when it has reached the end of the stroke.
- **Working position.** Loosen the support screws to the end of the stroke. Do not force it when it has reached the end of the stroke.

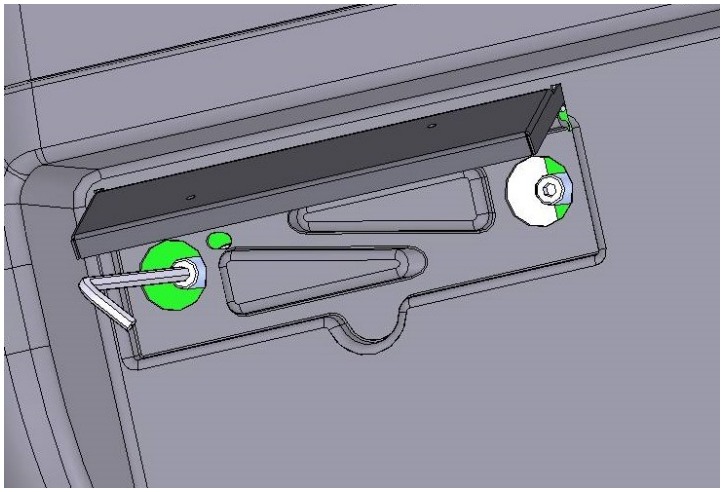

Turn the screws alternately to move the inner container in a vertical position.

6.3 Preparation for use

Once the unit has been moved close to the air conditioning system to be serviced, make sure it is resting on all four wheels on a flat, horizontal surface and locked wheels with brake in order to ensure proper functioning of the scales.

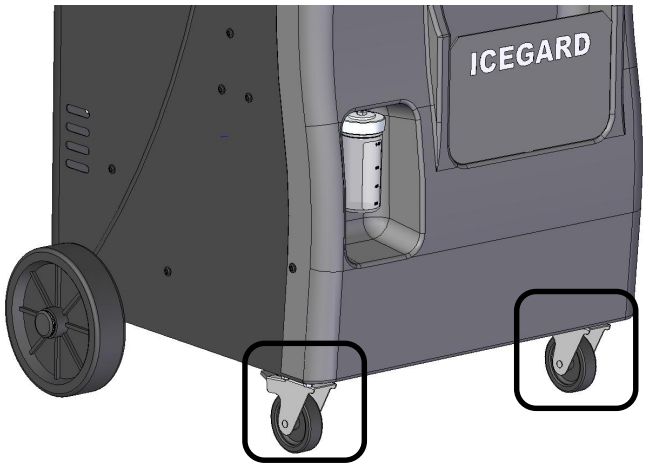

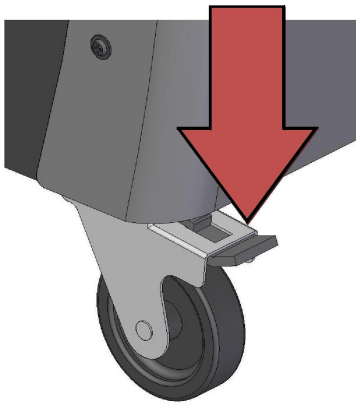

The unit must then be connected to a mains supply that conforms to that indicated on its identification plate (located next to the ON/OFF switch) especially with regard to *voltage, frequency and applicable power.*

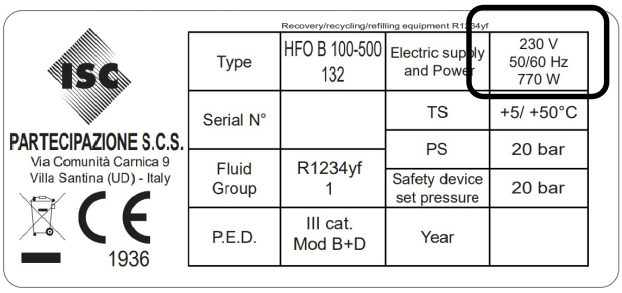

Recovery/recycling/refilling equipment R1234yf

PARTECIPAZIONE S.C.S.
Via Comunità Carnica 9
Villa Santina (UD) - Italy
1936

Type	HFO B 100-500 132	Electric supply and Power	230 V 50/60 Hz 770 W
Serial N°		TS	+5/ +50°C
		PS	20 bar
Fluid Group	R1234yf 1	Safety device set pressure	20 bar
P.E.D.	III cat. Mod B+D	Year	

6.4 Start-up

Ref. first start up schedule attached to the unit.

Place the Unit in a horizontal position with oil empty oil containers
Connect the unit to the mains supply, move the ON/OFF switch (**42**) to the ON (I) position.

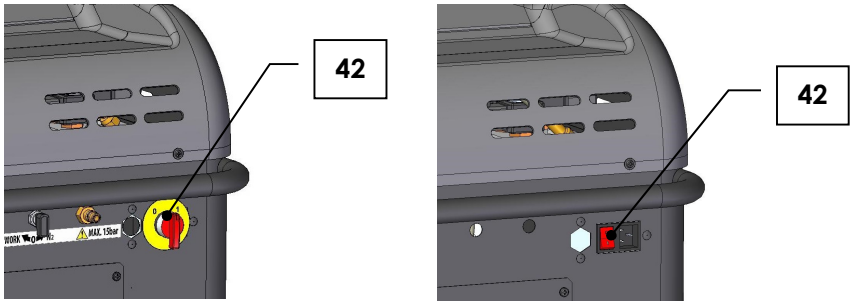

When the Unit is switched on for the first time, the data requested on the display must be entered in the unit. Select the language from those available. The default language is Italian.

```
SELECT LANGUAGE
     Italiano

Enter-Ok Stop-Exit ↕
```

Press **UP** and **DOWN** to select the requested language. Confirm with **ENTER**.

The display will then show the available resources (stand by).

```
Available quantities
Refrigerant g.
Oil         g.
```

Only now is it possible to lower the inner container from the safety position for transport purposes and place it in the work position. Ref. subsection 6.2 Unit handling and storage.

6.5 Switch off

To switch the unit off, move the main switch (**42**) to the OFF (0) position.

6.6 Internal tank filling phase

FOLLOW CAREFULLY THE INSTRUCTIONS BELOW TO PREVENT RELEASE OF THE REFRIGERANT INTO THE ATMOSPHERE
CHECK THAT THE TYPE OF REFRIGERANT INDICATED ON THE GAS SUPPLY BOTTLE IS THE SAME AS THAT INDICATED ON THE UNIT NAMEPLATE BEFORE TRANSFERRING THE REFRIGERANT

There are two types of source tank: with dip tube and without dip tube.
Tanks **with dip tube** must remain upright in order to be able to transfer the liquid refrigerant. Use connection **L** (liquid) for this type of tank.
Tanks **without a dip tube** have one valve only. They must therefore be turned upside down in order to transfer the liquid refrigerant.

Types of tank

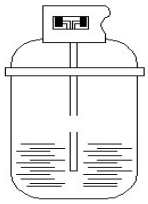

Tank with dip tube

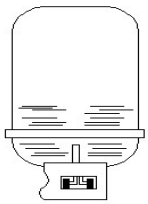

Tank without dip tube

Press the **ENTER** key in stand-by mode

```
Car/customer data   □
Skip data           □
Other menus         ■
Enter-Ok Stop-Exit
```

Press the **UP** and **DOWN** keys to select the desired menu. Confirm with **ENTER** key.

```
Int. tank filling   ■
non-c. gas purge    □
Print               □
Enter-Ok Stop-Exit
```

Press the **UP** and **DOWN** keys to select the desired menu. Confirm with **ENTER** key.

```
Connect HP hose
to the external tank.
Open the tank valve
Enter-Ok Stop-Exit
```

Follow the instructions shown. Confirm with **ENTER** key.

```
Enter the required
quantity and confirm
            g.
Enter-Ok Stop-Exit
```

Follow the instructions shown. Confirm with **ENTER** key.

The maximum refrigerant quantity storable inside the internal container is indicated in subsection "Technical characteristics". Consider that after the message "Required quantity ok. Close the external tank valve" the unit could still recover almost 1 kg.

```
Please wait !


Stop-Exit
```

```
Filling in progress
recovered quantity
             g.
Stop-Exit
```

```
Required quantity ok
Close the external
tank valve
Enter-Ok Stop-Exit
```

Follow the instructions shown. Confirm with **ENTER** key.

```
Wait! Refrigerant
recovery from
HP/LP hoses.
Stop-Exit
```

```
Process completed


Enter-Ok
```

Press the **ENTER** key, the display shows the stand-by mode.

7 MESSAGES

7.1 Malfunction/error messages

```
Unit ventilation
Insufficient.
RPM
```

Message only available in the R-1234yf version. The ventilation system for evacuation of the chassis is insufficient. The unit may not be used until the ventilation has been restored. Contact your Distributor.

```
Warning!
Over-pressure
in internal tank
Stop-Exit
```

Overpressure in internal container. Wait about 30 minutes activate the non-condensable gas discharge function Ref. subsection 10.2 Non-condensable gas discharge. Call Customer Service if the problem persists.

```
Tank hanged or
weight scale
calibration wrong
Stop-Exit
```

Attempt to perform a recover/recycling phase or filling of inner tank with the gas bottle in the safety position for transport purposes. Place the inner container in the working position.
The message may also be displayed in the presence of incorrect calibration of the refrigerant scales.

```
Warning!
Internal tank
filled.
Stop-Exit
```

Absolute maximum permitted weight of refrigerant in internal container reached. This value should never be exceeded under any circumstances.

```
Warning!
pressure inside the
A/C system.
Recycling start.
```

Appears <u>at the start</u> of the vacuum phase if pressure is found in the A/C system.

```
Warning!
over-pressure inside
the A/C system
Stop-Exit
```

Appears <u>during</u> the vacuum phase if pressure is found in the A/C system.

```
A/C system leakage
Continue?
              mB.
Enter-Ok Stop-Exit
```

A/C system not sealed. This message appears if an increase in the pressure reading occurs during the leakage check. Repair the A/C system. Press the **ENTER** Key to proceed with the next phase.

```
Insufficient vacuum
Continue?
             mb.
Enter-Ok Stop-Exit
```

- Appears after a vacuum time of 10 minutes if the pressure in the A/C system has not dropped below 100 mBar.
- It appears at the end of vacuum phase if pressure inside the A/C is not fallen under 70mBar.

```
Warning!
Insufficient vacuum.

Enter-Ok Stop-Exit
```

Overpressure during the pressure check phase at the beginning of the oil injection or UV additive injection phases. This phase is only carried out on A/C systems currently under vacuum.

```
Refr. qty. insuff.
Perform int. tank
Filling phase?
Enter-Ok Stop-Exit
```

Too low refrigerant quantity inside the internal tank.

```
Insufficient oil
please add oil.

Enter-Ok Stop-Exit
```

Insufficient oil quantities to perform selected phases.

```
External tank empty
or valve closed!
Check
Enter-Ok Stop-Exit
```

Appears at the start of the internal tank filling phase if there is no pressure or during the phase if the quantity of refrigerant set has not been reached.

```
Empty out drained
oil container

Enter-Ok Stop-Exit
```

Appears at the start of the recycling phase or during the oil discharge phase

```
Exceeding recycling
time
Continue?
Enter-Ok Stop-Exit
```

The maximum permitted time for the recovery/recycling phase has been reached. Check the pressure values on the gauges. If there is pressure, there may be a fault in the unit (call Customer Service). If there is no pressure, there may either be a leak in the A/C system or in the solenoid valves. Press the **ENTER** key to continue the recovery/recycling phase.

```
Exceeding filling
time
Continue?
Enter-Ok Stop-Exit
```

```
Turn HP connector
gear
counterclockwise
Enter-Ok
```

```
Start A/C system

Enter-Ok
```

Appears during the filling phase if the set quantity has not been reached during the maximum planned time if a HP-LP A/C system has been selected.
The remaining quantity of refrigerant is sucked by the compressor of the A/C system by following the instructions shown on the display.

```
Exceeding filling
time
Continue?
Enter-Ok Stop-Exit

Carry on
int. tank filling
phase!
Enter-Ok
```

Appears during the filling phase if the set quantity has not been reached during the maximum planned time if only a HP A/C system has been selected.

```
Exceeding filling
time

Enter-Ok
```

Press the **ENTER** key to continue the filling phase.

```
Start A/C system

Enter-Ok
```

Appears during the filling phase if the set quantity has not been reached during the maximum planned time if only an LP A/C system has been selected.
The remaining quantity of refrigerant is sucked by the compressor of the A/C system by following the instructions shown on the display.

7.2 Function messages

```
Warning filter
Refrigerant recovery
possible kg….xxx
Enter-Ok Stop-Exit
```

Appears at start-up if unit requires programmed maintenance.

```
Replace filter
Recycling and
vacuum pump oil.
Enter-Ok
```

Appears at start-up if unit requires programmed maintenance.
Reset respective work counters after replacing components.

```
Confirm start
selected phases ?

Enter –Ok Stop-Exit
```

Press the **ENTER** key, the unit performs the phases or the programmed cycle.

```
Process completed

Enter-ok
```

Press the **ENTER** key, the display shows the stand-by mode.

```
Now it is available
a new data base
version.
Enter-ok
```

```
Please contact
your dealer.

Enter-ok
```

Appears after one year from the first activation of the unit. Press the **ENTER** key, the display shows the stand-by mode.
Insert a memory stick in the USB port with a new version of the data base and switch ON the unit. Enter the password in order to update the data base.

```
Printer not
available
Continue?
Enter-Ok
```

Printer not on line (printer LED flashing). Possible causes are: printer lid not closed or lack of paper.

If the paper has finished, lift the printer lid to prevent print head from burning. **Only use ISC Systems paper.**

The appearance of one of these messages is accompanied by a buzzer sounding.

8 Operating description

With the Unit on Stand by mode, display shows the available sources:

- Refrigerant quantity
- Oil quantity

For disabling the UV injection ref. subsection 10 "Other Menus".

8.1 Operating Modes

The Unit memorizes the set values concerning the services performed on the A/C plants on the basis of the plate number if an automatic program, or a filling phase, has been carried on; setting a plate number already existing in the unit memory, it is possible to view the previous service data and to repeat the same service.

The Unit is also able to operate in the following cases:

Automatic program: it is possible to select a specific car model from a data base or simply set the refrigerant filling quantity. In the automatic program the vacuum time is calculated automatically, the oil injection quantity is 10 grams more then the quantity of oil drained and the UV quantity injected is 5 grams.

User program: the User can select which phases are to be performed.

After the selection of the preferred program, follow the instruction showed on the display.

8.2 Programming mode

- Press UP and DOWN key to select the desired program.
- Press ENTER key to confirm the selection.
- Press STOP key to interrupt the function execution and return to Stand-by.
  Press **STOP** key to return to previous screening during settings.

9 PROGRAMS

Connect the **HP/LP** connectors (or the single connector) to the A/C system.
Open the connectors (or the single connector) by turning the gear in a clockwise direction.
The **HP/LP** gauges (or the single pressure gauge) indicate the pressure in the two branches of the A/C system.

Press the **ENTER** key with the display in stand-by mode.

```
Car/customer data  ■
Skip data
Other menus        □
Enter-Ok Stop-Exit
```

The software is frequently upgraded. It is possible to detect some differences not described in this manual.

Press the **UP** and **DOWN** keys to select the desired menu.
Confirm with **ENTER** key.

It is possible to insert and to record the following data of the car and of its owner .

- Work Order Number
- Plate Number
- Vin
- Brand
- Model
- Displacement
- Kilometres
- Name
- Surname
- Telephone number

If the Unit finds that a service has been performed previously with reference to the same number plate introduced by the User, the display shows the following info:

```
Plate no.
Perform as prev.    ■
Prev. service data  □
Enter-Ok Stop-Exit
```

- Select **PERFORM AS PREVIOUS** and press **ENTER** key to confirm for service start.
- Select **PREVIOUS SERVICE DATA** and press **ENTER** key to view the recorded data.
  Press **UP** and **DOWN** keys to scroll the following information:
  - Filled quantity
  - Vacuum time
  - Leak test time
  - Pressure increase during leak test time
  - Oil injected quantity
  - UV injected quantity
  - Refrigerant recovered quantity
  - Oil drained quantity

  Press **ENTER** key to confirm the service.
  Press **STOP** key to exit.

> The software is frequently upgraded. It is possible to detect some differences not described in this manual.

- Press **STOP** key to exit.

```
HP/LP couplers     ■
HP coupler only    □
LP coupler only    □
Enter-Ok Stop-Exit
```

Press the **UP** and **DOWN** keys to select the desired menu. Press **ENTER** key to confirm.

See also paragraph 9.11 Enabling operators

9.1 Automatic Program

```
Automatic progr.   ■
User program       □
Flushing           □
Enter-Ok Stop-Exit
```

Press the **UP** and **DOWN** keys to select the desired menu.
Press **ENTER** key to confirm.

> If UV injection is enabled, visually check for the presence of UV tracer in the container before confirming execution of the service or disable the function (ref. subsection "Other Menus".

```
Enter the filling  ■
value  g.
Search model       □
Enter-Ok Stop-Exit
```

Enter the desired filling value of the A/C system and confirm with **ENTER** key to perform an automatic cycle
Press the **DOWN** key and confirm with **ENTER** key to seek the vehicle model in the data base.

9.1.1 Model Search (Data base)

Select **SEARCH MODEL** to have access to vehicles data base.

```
Enter the          □
filling q.ty  g.
Search model       ■
Enter-Ok Stop-Exit
```

Press the **UP** and **DOWN** keys to select the desired menu. Press **ENTER** key to confirm.

```
User models
>First brand       <
 Second brand
Enter-Ok Stop-Exit ↕
```

Press **UP** and **DOWN** Key to select the brand desired. Confirm with **ENTER** key.
Repeat the same operation for all the fields of application requested in order to identify the exact quantity to fill. Confirm with **ENTER** key to perform the service.

9.1.2 User Models

It is also possible to create your own Data Bank composed at least of 20 items.

```
User models
>First brand       <
 Second brand
Enter-Ok Stop-Exit ↕
```

Press **UP** and **DOWN** Key to select **USER MODELS**. Confirm with **ENTER** key.

```
>User Mod. 1       <
 User Mod. 2
Enter-Ok Stop-Exit ↕
```

Press **UP** and **DOWN** Key to select the user model required. Confirm with **ENTER** key to start the service.

To set the data of a user model, select a free user model and press an alphanumeric key.

To achieve a greater accuracy in the reading of the quantity recovered, open the connectors (or the single connector) by turning the knobs in a clockwise direction during display of this message, and not before.

```
Mod.:
Refrigerant q.ty. g
Vacuum time:
Enter-Ok Stop-Exit
```

Enter the three data requested (user model name, filling quantity, vacuum time), confirm with **ENTER** key after every data.
Confirm with **ENTER** key to save the user model set.

Recovery/recycling phase

The unit starts cleaning its internal circuit.

```
Please wait!


Stop-Exit
```

When the internal cleaning is completed, the unit starts to recover the refrigerant from the A/C system.

```
Recycl. in progress
recovered quantity
             g.
Stop-Exit
```

When the unit detects that the A/C system is empty, the function stops automatically.
A check on the pressure increase inside the A/C system is started.

```
Pressure increase
Test.
            Sec.
Stop-Exit
```

If the pressure in the A/C system rises up, the recovery phase starts again automatically with the recovery/recycling phase.

The unit drains the extracted oil into the oil drain container (**21**).

```
Check drained oil
quantity.

Quantity   g.
```

```
Please wait!

Stop-Exit
```

```
Recycling completed
Recovered quantity
           g.
```

The recovery/recycling phase is now completed.
The unit automatically proceeds to the next phase.

Any non-condensable gases present in the A/C system are also recovered during the recovery/recycling phase.
The presence of an excessive quantity of non-condensable gas contaminates the refrigerant stored in the inner container.

The unit is therefore fitted with a function which automatically calculates the presence of non-condensable gases and, if necessary, releases them through a sintered filter.

The function may also be called by the operator (Ref. subsection 10 "Other Menus").

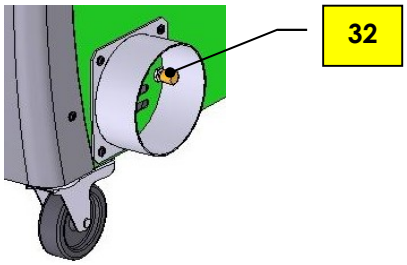

Vacuum phase

The unit performs the vacuum phase.

```
Vacuum in progress.

Time            xx:xx
Stop-Exit
```

When the time is up, the control of any leakages in the A/C system starts.

```
Leak test in
Progress    sec.
P1mb   xx  P2mb   xx
Stop-Exit
```

The data is shown on the display for a few seconds.

```
Vacuum completed

          mb.
```

The unit automatically proceeds to the next phase.

- P1 indicates the pressure inside the A/C system at the end of the vacuum time.
- P2 indicates the pressure inside the A/C plant during the leak test.

Oil injection

The unit performs the oil injection phase.

```
Fresh oil injection
in progress
quantity        g.
Stop-Exit
```

The data is shown on the display for a few seconds.

```
Fresh oil injection
Completed.
Quantity   g.
Stop-Exit
```

The unit automatically proceeds to the next phase.

During oil injection in automatic mode, even with a second oil container enabled, only the oil of container 1 is injected.

UV additive injection

The unit carries out the UV additive injection phase.

```
UV injection
in progress
quantity        g.
Stop-Exit
```

The data is shown on the display for a few seconds.

```
UV injection
completed
quantity        g.
Stop-Exit
```

The unit automatically proceeds to the next phase.

If the UV injection is enabled, visually check for the presence of UV tracer in the container before confirming execution of the service or disabling the function (ref. "Other menus").

Filling phase

The unit performs the filling phase.

```
Filling phase
in progress
quantity   g.
Stop-Exit
```

The data is shown on the display for a few seconds.

```
Filling completed.
Quantity  g.

Process completed
start A/C system
for checking.
Enter-Ok
```

The cycle is now fished, it is necessary to check the A/C systems performances. See subsection 10.8.

Working on only LP port plants, the filling phase is performed intermittently.

If the pressure is not enough to finish the filling phase, a procedure to fill the remaining quantity with the suction port of the A/C system compressor is carried out.
See subsection" MESSAGES".

9.2 User program

Connect the **HP/LP** connectors (or the single connector) to the A/C system.
Open the connectors (or the single connector) by turning the knob in a clockwise direction.
The **HP/LP** gauges (or the single pressure gauge) indicate the pressure in the two branches of the A/C system.

Press the **ENTER** key with the display in stand-by mode.

```
Automatic program  □
User program       ■
Flushing           □
Enter-Ok Stop-Exit
```

Press the **UP** and **DOWN** keys to select the desired menu. Confirm with **ENTER** key.

```
Recycling ?        YES
                   NO

Enter-Ok Stop-Exit
```

Press the **UP** and **DOWN** keys to select. If **NO** is selected, the display proposes the vacuum phase.

```
Recycling?      YES
Pressure increase
test time min.    x
Enter-Ok Stop-Exit
```

The display proposes a one minute pressure increase control before finally completing the refrigerant recovery phase.
Set the desired value. Confirm with **ENTER** key.

```
Vacuum phase     yes
                 no

Enter-Ok Stop-Exit
```

Press the **UP** and **DOWN** keys to select. If **NO** is selected, the display proposes the filling phase.

```
Vacuum time      xx
Leak test
time          min. x
Enter-Ok Stop-Exit
```

Vacuum time:
- **Minutes** enter 2 digits
- **Hours and minutes** enter 4 digits

The display proposes a 20 minutes vacuum phase; set the desired value.
Press the **DOWN** key to modify the leakage control time.
The display proposes a 4 minute leakage control at the end of the vacuum time.
Set the desired value. Confirm with **ENTER** key.

```
Oil filling     yes
                 No

Enter-Ok Stop-Exit
```

Press the **UP** and **DOWN** keys to select. If **NO** is selected, the display proposes the UV injection phase.

```
Automatic oil    yes
                 no

Enter-Ok Stop-Exit
```

Press the **UP** and **DOWN** keys to select. If **NO** is selected, the unit requests the absolute quantity of oil to be injected.

```
Oil quantity    g.  xx


Enter-Ok Stop-Exit
```

If **YES** is selected, the unit requests the quantity to be added to the quantity of oil drained during the recovery phase.

```
UV filling      yes
                 no

Enter-Ok Stop-Exit
```

Press the **UP** and **DOWN** keys to select. If **NO** is selected, the display proposes the filling phase.

```
UV  quantity    g.  xx


Enter-Ok Stop-Exit
```

Set the quantity of UV additive to be injected.
Confirm with **ENTER** key.

```
Filling phase
Enter quantity
             g.  xx
Enter-Ok Stop-Exit
```

Set the quantity of refrigerant to be filled. Confirm with **ENTER** key.
The display proposes the confirmation of all the selected phases.

```
Confirm start of
selected phases ?

Enter-Ok Stop-Exit
```

The performance of the selected phases is the same as the automatic Program. See subsection **Errore. L'origine riferimento non è stata trovata.** Automatic Program.

9.3 Flushing

Use the suggested flushing kit to connect the unit at the part of the A/C system to be flushed (see the instruction of the flushing kit) .
Select **HP/LP** quick connectors in order to let flushing available.

> It is suggested to perform flushing in the following cases:
> - Replacing of A/C system compressor.
> - Presence of dust or moisture inside A/C system.
> - Any time there are doubts regarding the A/C system cleaning.

```
Automatic program  □
User program       □
Flushing           ■
Enter-Ok Stop-Exit
```

Press the **UP** and **DOWN** keys to select the desired menu.
Confirm with **ENTER** key.

```
Enter
N° of flushing
cycles
          N°
```

Enter the desired number of cycles. Press **ENTER** to confirm.

```
Enter flushing
time
per cycle
         min
```

Set the desired time. Confirm with **ENTER** key.

```
Flushing !
Cycle n°
In progress
```

```
Pleae wait !
Flushing
in progress
Stop-Exit
```

```
Process completed.

Stop- Exit
```

> In order to carry out the flushing correctly, link to the system component in order to circulate the refrigerant in the opposite direction to that of the component during normal operation of the A/C system.
> (The filling is performed in HP, the recovery in LP).

Press the **ENTER** key, the display shows the stand-by mode.

10 OTHER MENUS

Press the **ENTER** key with the display in stand-by mode.

```
Car/customer data   □
Skip data           □
Other menus         ■
Enter-Ok Stop-Exit
```

Press the **UP** and **DOWN** keys to select the desired menu. Confirm with **ENTER** key.

```
Int. tank filling   ■
Non-c. gas purge    □
Print               □
ENTER-OK STOP-EXIT ↕

A4 print
Back up/restore     □
Service history     □
ENTER-OK STOP-EXIT ↕

Back up gas report  □
Diagnosis           □
Leak test N2        □
ENTER-OK STOP-EXIT ↕


UV ON/OFF           □
Operators enabling  □
Disable POE         □
ENTER-OK STOP-EXIT

Enable POE          □
Service             □

ENTER-OK STOP-EXIT
```

Press the **UP** and **DOWN** keys to select the desired menu.

Confirm with **ENTER** key.

10.1 Filling internal tanks

See subsection 6.6 Internal tank filling phase.

10.2 Non-condensable gas discharge

```
Manual exhaust      ■
Automatic check     □

STOP-EXIT
```

Press the **UP** and **DOWN** keys to select the desired menu.

Confirm with **ENTER** key.

- Manual discharge: keep the non-condensable gas discharge open until ENTER remains pressed.
- Automatic check:
a calculation algorithm is used to detect any non-condensable gas and discharge it automatically.

10.3 Printer

The ***ICEGARD ROSSO*** prints a coupon which reports the info concerning each service phase performed; the functions specified here below are also available:

```
Repeat print        ■
Refrigerant IN /OUT □
Customize data      □
Enter-Ok Stop-Exit  ↕
```

Press the **UP** and **DOWN** keys to select the desired menu. Confirm with **ENTER** key.

10.3.1 Repeat service report

Select **REPEAT PRINT** to print a copy of the service report of the last service performed.

10.3.2 Refrigerant in/out

Select **REFRIGERANT IN/OUT** to print a service report scheduled for month that indicates the quantity of refrigerant recovered and filled.

10.3.3 Personalization of service report heading

Select **CUSTOMIZE DATA** to modify the heading of service report.
The heading is composed of 5 lines and 20 characters.
The display shows the following screen:

```
Enter company
data
ISC Systems
Enter-Ok Stop-Exit
```

One line at a time may be modified. The cursor positions itself over the first character of the first line.
Press the **UP** and **DOWN** keys to position the cursor over the digits to be edited.
Modify the text with the alphanumeric keys.
Press the **ENTER** key to confirm the modifications made to the first line.
The display proposes the entering of data for the second line.
Proceed as described for all the remaining lines.

10.4 A4 Printout

```
Backup data
last job to print
In A4?
Enter-Ok Stop-Exit
```

Confirm with **ENTER** key.

A "Last Job.hst" file is generated and entered on the memory stick, if installed. The file may be imported on a PC and read by means of the "Historical serv & A4 print out.xls" application, which may be downloaded from www.iscsystems.it.

10.5 Back up/restore

```
Transfer calibrat.
user models and
parameters?
Enter-Ok Stop-Exit
```

Confirm with **ENTER** key.

```
Transfer from > to
logic board>usb    ■
usb>logic board    □
Enter-Ok Stop-Exit
```

Press **UP –DOWN** to select desired menu. Press **ENTER** to confirm.

The name of the file generated is represented by the unit serial no. and it will have the .bck extension (e.g. H1234567.bck).

10.6 Exporting service history

```
Back up of
previous services?

Enter-Ok Stop-Exit
```

Confirm with **ENTER** key.

A .hst file is generated and entered on the memory stick, if installed. The .hst file may be imported on a PC and read by means of the "Historical serv & A4 print out.xls" application, which may be downloaded from www.iscsystems.it.

The name of the file generated is represented by the unit serial no. and it will have the .hst extension (e.g. H1234567.hst).

10.7 Exporting refrigerant IN/OUT

```
Back up of previous
IN/OUT gas report

Enter-Ok Stop-Exit
```

Confirm with **ENTER** key.

A .rio file is generated and entered on the memory stick, if installed. The .rio file may be imported on a PC and read by means of the "Refrigerant IN OUT.xls" application, which may be downloaded from www.iscsystems.it.

The name of the file generated is represented by the unit serial no. and it will have the .rio extension (e.g. H1234567.rio).

10.8 Diagnosis

The Unit is equipped with a diagnosis system which is able to check the performances of the A/C systems and suggests the possible causes of unsatisfactory results.

The appropriate function of A/C diagnosis is available both at the end of filling phase and from **OTHER MENUS**. Proceed as follows to perform a diagnosis in the correct way:

1. Connect the **HP/LP** connectors to the A/C system
2. Open the connectors by turning the knob in a clockwise direction
3. Start the engine and keep it around 1.500/2000 r.p.m
4. Start the A/C System
5. Reduce the A/C temperature to a minimum and increase the ventilation speed to the maximum.
6. Let the A/C System running for 10 minutes
7. Check the following values:
   - T.E external temperature, (C°)
   - T.I internal temperature at the main small opening of the A/C, (C°)
   - P.HP pressure detected by the HP manometer, (bar)
   - P.LP pressure detected by the LP manometer, (bar)
8. Set the detected values, see below.

In order to detect the temperatures T.I. and T.E. use the thermometer with two temperatures detectable code 7000260360

```
A/C system diagnosis
P.HP:   .   P.LP:   .
T.I.:   .   T.E.:   .
Enter-Ok Stop-Exit
```

Press **ENTER** for the Unit to processes the data. In case of unreasonable data or unsatisfactory performances, the display shows the different situations that may occur in the A/C system.

EACH CASE IS INDICATED WITH A SINGLE SCREEN.

Example of diagnosis screen:

```
Compressor
hoses
reversed
Enter-Ok
```

Symbols diagnosis screens:
- **(V.D.)** only for **variable** displacement compressor.
- **(F.D.)** only for **fixed** displacement compressor.

Push **UP** and **DOWN** to show the next cases. Press **ENTER** Key to continue.

10.8.1 Hoses emptying

```
Disconnect HP/LP
hoses from A/C

ENTER-OK STOP-EXIT
```

Disconnect the unit from the A/C system.
Press **ENTER** key to confirm.

```
WAIT! Refrigerant
recovery from
HP/LP hoses
Stop-Exit
```

The Unit recovers the refrigerant still present inside the charging hoses.
The Unit shows the stand-by mode.

10.8.2 Suction of refrigerant through the A/C System

By selecting the diagnosis from **OTHER MENUS**, the Unit carries out the procedure to let the A/C systems recover the refrigerant present inside the filling hoses.

```
Disconnect HP hose
from A/C system

Enter-Ok
```

Confirm with **ENTER** Key.

```
Start A/C System

Enter-Ok
```

Confirm with **ENTER** key.

Wait till when the compressor of the A/C System recovers the refrigerant contained in the **HP/LP** hoses. When the pressure detected with the manometers stops to decrease press **ENTER** Key.

```
Switch off
A/C system

Enter-Ok
```

Confirm with **ENTER** key, the unit proceeds with the empting hoses procedure. See paragraph 10.8.1.

10.9 Leakage test with N2 nitrogen

The ***CLIMA-TECH TOP NEXT/HFO*** is able to test the A/C system with nitrogen (N2).

The function requires the use of the device charge /discharge N2, code 7540004320

Use only pure nitrogen. Don't use air compressed or other technical gases, see paragraph Errore. L'origine riferimento non è stata trovata. Errore. L'origine riferimento non è stata trovata..
Max test pressure 15 Bar .

Recover and vacuum the A/C systems, connect the nitrogen supply to the charge/discharge N2 device , and this to the male LP (**25**) connection in the back of the unit.

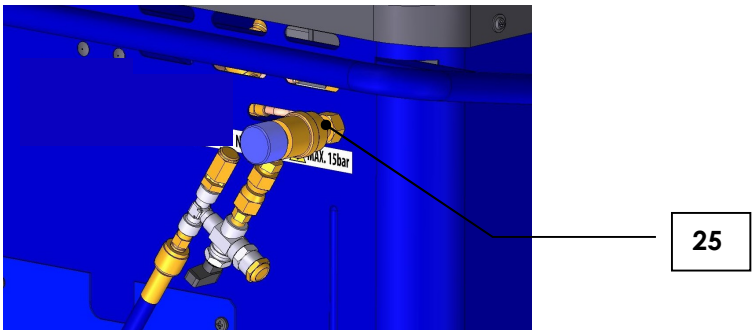

```
Please make sure A/C
plant or component
are empty
Enter-Ok Stop-Exit
```

Press **ENTER** to confirm.

```
Enter pressure
settlement time
            min
Enter-Ok Stop-Exit
```

Enter the desired time. Press **ENTER** to confirm.

```
Enter time of
check pressure
fall down      min
Enter-Ok Stop-Exit
```

Enter the desired time. Press **ENTER** to confirm.

```
Enter fall down
pressure    N2
              mBar
Enter-Ok Stop-Exit
```

Enter the permitted pressure drop value. Press **ENTER** to confirm.

```
Connect A/C or
Component to be
Tested
Enter-Ok
```

Confirm with **ENTER** Key. The Unit performs 1 minute of vacuum .

Only at the end of the vacuum it is possible to release the nitrogen

Follow the instructions shown on the display. A result slip is printed at the end of the test.

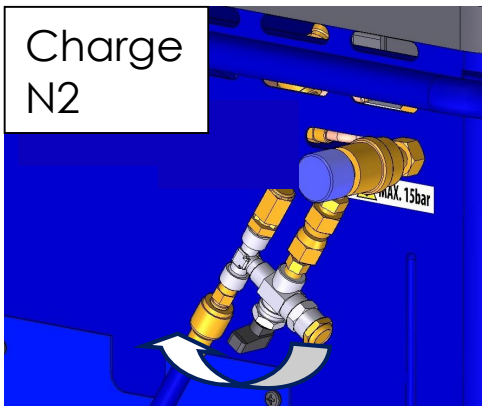

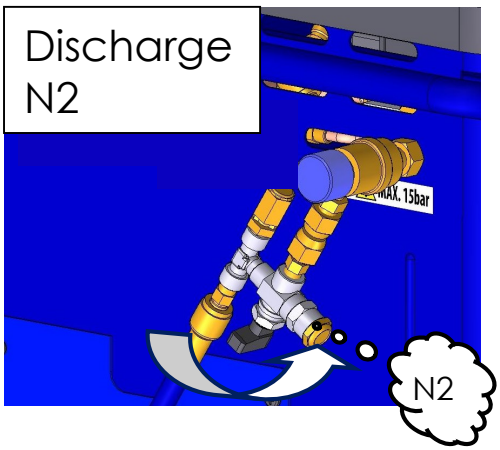

10.10 UV ON/OFF

```
Enable UV cont.     ■
Enable UV cont.     □
Enter-Ok Stop-Exit
```

Press **UP –DOWN** to select desired menu. Press **ENTER** to confirm.

10.11 Enabling operators

The function allows at an "administrator" to assign a code or a password to any operator enabled to use the unit.
If the function is enabled, the operator password will be always required to program the phases or a cycle.

```
Operator enabling     □
Operator disabling    ■
Enter-Ok Stop-Exit
```

If the administration password is not present , the unit will ask you to create one .

Press **UP-DOWN** to select the menu desired . Confirm with **ENTER .**

```
Enter administrator
Password
xxxxxxxxxxxxxx
Enter-Ok
```

Type in the administrator password . Confirm with **Enter**.

```
>Operator 1              <
>Operator 2              <
Enter-Ok Stop-Exit
```

Press **UP-DOWN** to select the operator desired . Confirm with **ENTER .**

```
Operator :
xxxxxxxxxxxxxxxxx
Delate operator       □
Stop-Exit
```

Press **UP-DOWN** to select the menu desired . Confirm with **ENTER .**

```
Enter operator
Name
xxxxxxxxxxxxxxxxx
Enter-Ok Stop-Exit
```

```
Enter operator
Password
xxxxxxxxxxxxxxxxx
Enter-Ok Stop-Exit
```

10.12 Enable container POE (Hybrid)

The Unit is able to perform a service also on the electronic car or hybrid car , with the electrical compressor and not belt driven compressors. These systems contain a type of oil POE with high dielectric resistivity.

The contaminations of these A/C systems with other oil get to decrease its resistivity , creating the risk of electrical shock for the operator.
Work on this A/C systems only if professionally prepared and follow carefully the procedure of this chapter.

Insert the oil POE (with eventually the tracer oil UV at base POE) in to apposite container (**20 bis**)
See the paragraph 4.2 to identify the component.

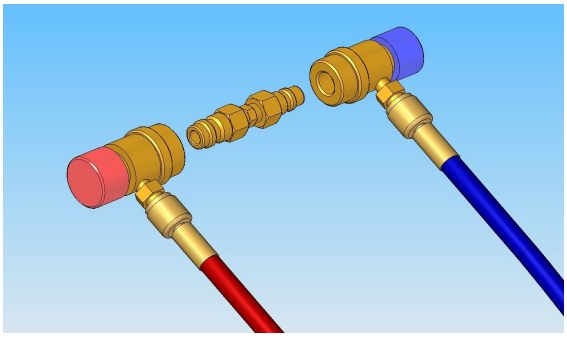

```
Install By-pass
Between
HP and LP
Enter-Ok
```

Connect the HP and LP connectors at by-pass included .

Open the connectors by turning the knob clockwise.
Confirm with **ENTER**.

The unit perform a cleaning phase of the internal circuit. Wait the automatic stop of the phase.

10.13 Disable POE container (Hybrid)

Use this function to restore the use of the unit with the containers oil and UV PAG type

10.14 Service menu

```
Enter password

      ____
```

10.14.1 Date and time

Enter password 8463 . Press **ENTER** to confirm.

```
EDIT DATE & TIME
DATE:       xx/xx/xx
TIME:       xx/xx/xx
ENTER-OK STOP-EXIT
```

Press **UP** and **DOWN** key to place on values that should be dated; enter the correct values. Press **ENTER** to confirm.

10.14.2 Setting language

Enter password 5264. Confirm with **ENTER** key.

```
SELECT LANGUAGE
      Italiano

Enter-Ok Stop-Exit ↕
```

Press the **UP** and **DOWN** keys to select the desired language. Confirm with **ENTER** key.

10.14.3 Counters reset

Enter password **2668**, Confirm with **ENTER** key.

```
Refr. recovered q.ty
               g.
Counter reset?
Enter-Ok Stop-Exit
```

Confirm with **ENTER** key.
The display shows

```
Press ENTER key
For 3 seconds!

Enter-Ok Stop-Exit
```

```
Counter reset ok!


Enter-Ok
```

Confirm with **ENTER** key.

10.14.4 Enabling oil-tight containers

Enter password **7846**. Confirm with **ENTER** key.

10.14.5 Restoring standard oil containers

Enter password **7863**. Confirm with **ENTER** key.

11 STOPPAGE FOR PROLONGED PERIODS

The unit must be stored in a safe place, disconnected from the mains supply and protected from high temperatures, humidity and the risk of collision with other objects that could damage it.
Make sure that the valves on the internal tank are closed.
To resume use, follow the activation procedure ***only after having reopened the internal tank valves***.

12 MAINTENANCE routine maintenance kit code (7000100300)

The ***ICEGARD ROSSO*** is an extremely reliable unit, built with top-quality components and using the most advanced production techniques.
For these reasons, maintenance is reduced to a minimum, with long intervals between services. Each periodic maintenance operation is monitored by counters. When these counters reach the prescribed count, the following messages are displayed:

```
Replace filter
recycling and
vacuum pump oil
Enter-Ok
```

When the maximum quantity of refrigerant for the dehydrator filter is reached, the filter should be replaced and the relative counter returned to zero, ref. subsection 10.14.3 Counters reset.

At the same as performing the routine maintenance activities, it is recommended that the pressure sensors be calibrated for the zero points of the scales.
An authorized ISC Systems Customer Service Centre should be contacted for maintenance activities (with the exception of those listed below) and the purchase of spare parts.

12.1 Replacement of vacuum pump oil

The vacuum pump oil must be replaced frequently in order to ensure best performances of the unit.
To change the oil, follow these instructions:

Do not work on parts of the unit that are not specifically mentioned in this section.

Tools required:
1 Hexagonal spanner (10 mm)
1 Cross-head screwdriver

1 Disconnect the unit from the power supply.
2 Remove the oil drainage vessel (**21**), remove the 4 screws that secure the lower panel to the unit and remove the panel.
3 Remove the plug (**63**) and place a container beneath the hole to collect the oil.
4 Use a 10 mm hexagonal spanner to remove the oil plug (64) below the inspection glass and allow all the oil in the vacuum pump to drain out.
5 When the pump has been emptied, replace the oil plug (**64**), install the plug (**63**) and open the upper cap (**61**).
6 Fill the pump with oil by pouring it into the upper hole (**61**) until it reaches halfway up the inspection glass (**62**).
7 Once the pump has been filled, close the upper cap (**61**).

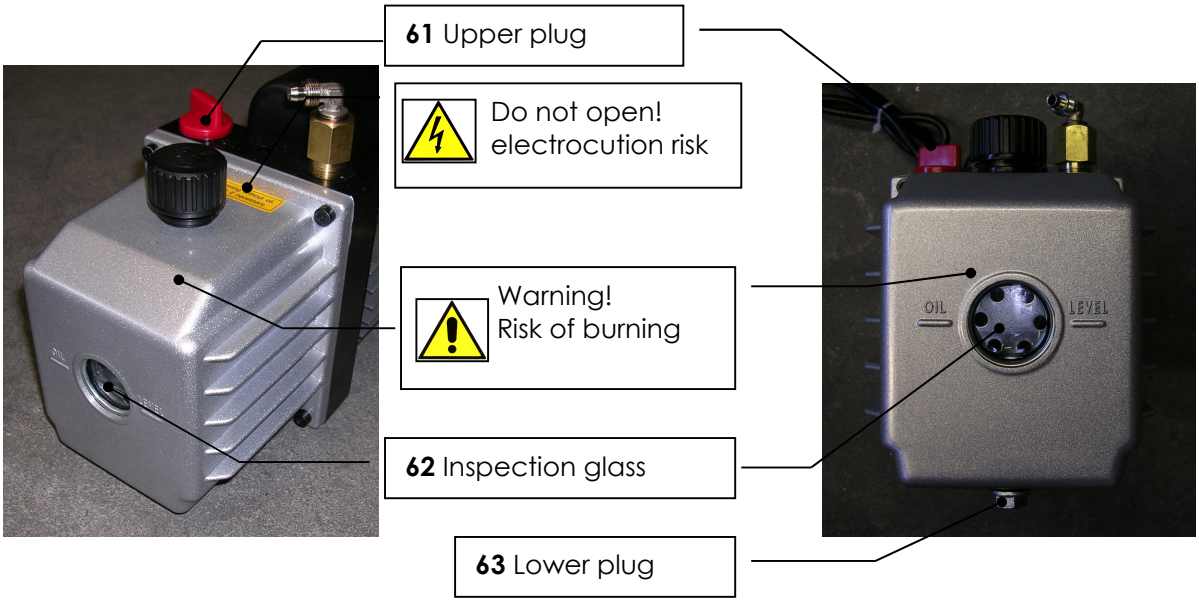

12.2 Filter replacement

The dehydrator filter must be replaced when it is no longer able to absorb the humidity present in the recycled refrigerant.
To change the filter, follow these instructions:

DO NOT work on parts of the unit that are not specifically mentioned in this section.

Tools required:
1 Cross-head screwdriver
2 Hexagonal spanners (19 mm + 20 mm)

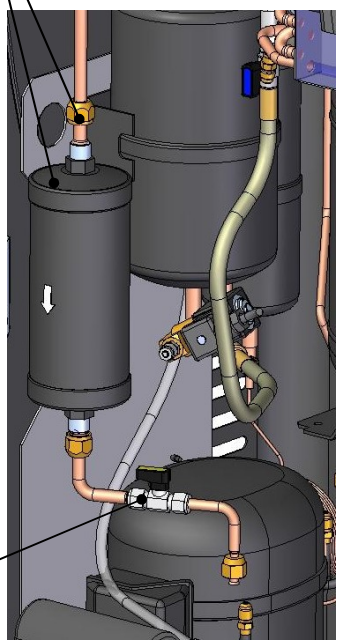

1 Carry out a recovery phase, and then immediately close the valve (**48**) to prevent the leakage of refrigerant vapours.
2 Disconnect the unit from the power supply.
3 Use the hexagonal spanners to undo the 2 nuts connected to the filter (**15**).
4 Unscrew the 2 nuts connected to the filter (**15**) with the hexagonal spanners.
5 Cut the support belt.
6 Install the new filter, paying attention to the position of the O-rings and to the arrow direction.
7 Using the hexagonal spanners, tighten the 2 nuts connected to the filter (**15**.
8 Install a new belt.
9 Open the valve (**48**).
10 Reset the counter. See paragraph 10.14.3

12.3 Replacing hose gaskets

Do not carry out any activities on parts of the unit which are not specifically referred to in this section.

Regularly check the state of wear of the rubber gaskets on the filling hoses (**6**) and (**5**) and, if necessary, remove them and replace with the new ones provided in the routine maintenance kit.

Carry out a recovery/recycling phase before removing the filling hoses and check that the pressure gauges do not show any pressure.

12.4 Scales calibration

```
Enter password.
        ____
```

Enter code **7225**. Confirm by pressing **ENTER**.

```
Select scale
Refrigerant        ■
Oil 1 filling      □
ENTER-OK STOP-EXIT ↕
```

Press **UP –DOWN** to select desired scales. Confirm by pressing **ENTER**.

```
  --Refrigerant--
Tank lifted

ENTER-OK STOP-EXIT
```

In the case of calibration of the oil or UV cell the display shows **CONTAINER EMPTY?**

With the gas bottle lifted, or the oil container completely empty, press **ENTER**.
The unit needs to wait a few seconds to stabilise the weight.

```
  --Refrigerant--
Tank lifted?

    WAIT!
```

```
  --Refrigerant--
Place the sample
weight.
STOP-EXIT
```

Place the sample weight of 1,5kg provided, or a known weight, e.g. **10 kg** on the cell support. The unit needs to wait a few seconds to stabilise the weight.

```
  --Refrigerant--
Place the sample
weight.
    WAIT!
```

```
  --Refrigerant--
Place the sample
weight.
ENTER-OK STOP-EXIT
```

Confirm by pressing **ENTER**.

```
  --Refrigerant--
Enter the right
value!  g.XXXXX
ENTER-OK STOP-EXIT
```

Set the sample weight value. Confirm by pressing **ENTER**.

```
Calibration OK!

ENTER-OK
```

Press **ENTER.**

Press **UP – DOWN** to select next scales.

Press **STOP** to leave calibration menu.

In the case of calibration of the oil or UV cell insert the sample weight inside the container, at least **200 g** or use the sample weight provided.

In the case of a calibration error the display shows **CALIBRATION DEFECT. RETRY OR REPLACE SCALES.**
IMPORTANT:
before replacing the load cell, enter the default parameters, password 7782 and recalibrate all the cells and the pressure sensor.

12.5 Pressure sensors calibration

From the stand-by position, press for five seconds **C** and then **ENTER**.
The display shows **ENTER PASSWORD**, enter the password **7737** and confirm with **ENTER** key.

WARNING:
Before removing the quick release couplings, check that the pressure gauges do not show any pressure in the filling hoses; otherwise, carry out a recovery phase.

```
HP/LP couplers couplings
removed?

ENTER-OK STOP-EXIT
```

Remove both the quick release couplings from the filling hoses.
Confirm with **ENTER** key.

```
Install HP/LP
couplers

ENTER-OK
```

Refit quick release couplings on filling hoses.
Confirm with **ENTER** key.

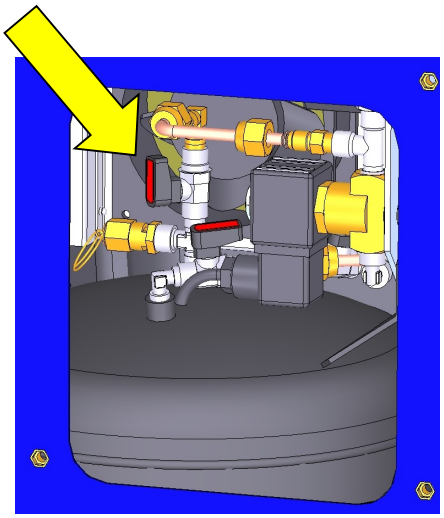

```
Vacuum in progress


ENTER-OK STOP-EXIT
```

```
Calibration OK!

ENTER-OK
```

Confirm with **ENTER** key.

```
Close cock
non-cond. gases
purge
ENTER-OK
```

Close non-condensable gas discharge valve (**37**), confirm with **ENTER** key.

```
Open exhaust
non-cond. gases
purge cock
ENTER-OK
```

Open non-condensable gas discharge valve (**37**), confirm with **ENTER** key and await end of procedure.

```
Calibration OK!

ENTER-OK
```

Press **ENTER** to exit from menu.

13 DISPOSAL

13.1 Environmentally-friendly disposal

This product can contain substances that may be dangerous for the environment and harmful for operators if it is not disposed of in the appropriate way.

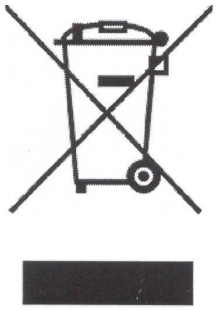

All the necessary Information is given below to avoid the release of such dangerous substances and to optimize the use of natural resources.
The electrical and electronic equipment must not be disposed of with normal urban waste, but must be sent to specialized disposal areas for the appropriate processing.
The symbol of the barred dustbin, shown on the equipment and on this page, is a reminder to dispose of the product at the end of its lifetime.
In this way, it is possible to prevent incorrect processing of the substances contained in such products or an improper use of their parts from causing harmful consequences, both for environment and human health.
Furthermore, you can contribute towards the recovery, recycling and reutilisation of many raw materials contained in this equipment.
For this purpose, both manufacturers and distributors of electric and electronic equipment organise appropriate collection centres for recycling this equipment.
At the end of the product's service life, please contact your Distributor to obtain information about collection centres.
When buying a Unit, your distributor will inform you about the opportunity of returning - free of charge - other equipment: the necessary requirement is that this equipment has the same type of use (in this case, a Unit for the maintenance of the A/C equipment) and that it can perform the same operative functions as the product previously purchased.
Any disposal of the product different from the instruction included in this document will be subject to the penalties specified by the national laws of the country where the product will be disposed.
We recommend you adopt further measures favourable to the environment: recycling internal and external package of the equipment.
Thank you for your active cooperation. We can significantly reduce the quantity of natural resources employed for manufacturing electric and electronic equipments, minimizing the use of sites for the disposal of the products and improve the standards of life by avoiding the release of dangerous substances into the environment.

13.2 Disposal of recycled material

The refrigerants recovered from systems which cannot be reused must be delivered to the gas suppliers for proper disposal.

The lubricants extracted from systems must be delivered to used oil collection centres.

14 FLOW DIAGRAM